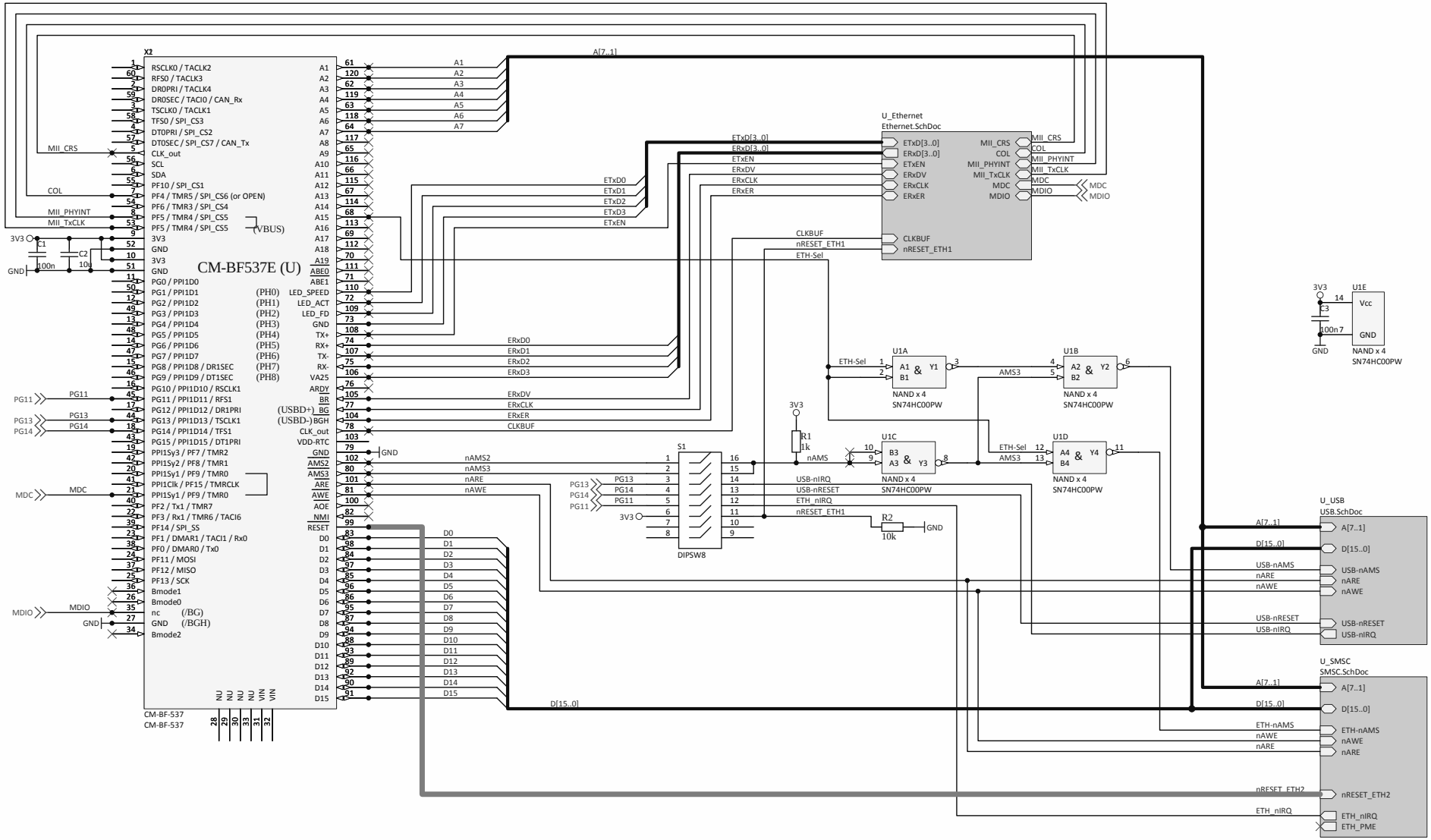

Logo_6mm

EXT-BF5xx-USB-ETH2	PN: PN2007021	Bluetechnix	Cannot open file S:\qm\Organisation\Logo\logo_blau_vektor [Converted].bmp
Extender / Address-logic	Rev: V2.0	Waidhausenstr. 3/19	
	Size: A3	A - 1140 Wien	
	Sheet 1 of 4	AUSTRIA	
Drawn: Daniel Steinmair	Last Update: 26.08.2010		
Checked: Roland Oberhammer	Filename: ext_UE.SchDoc		

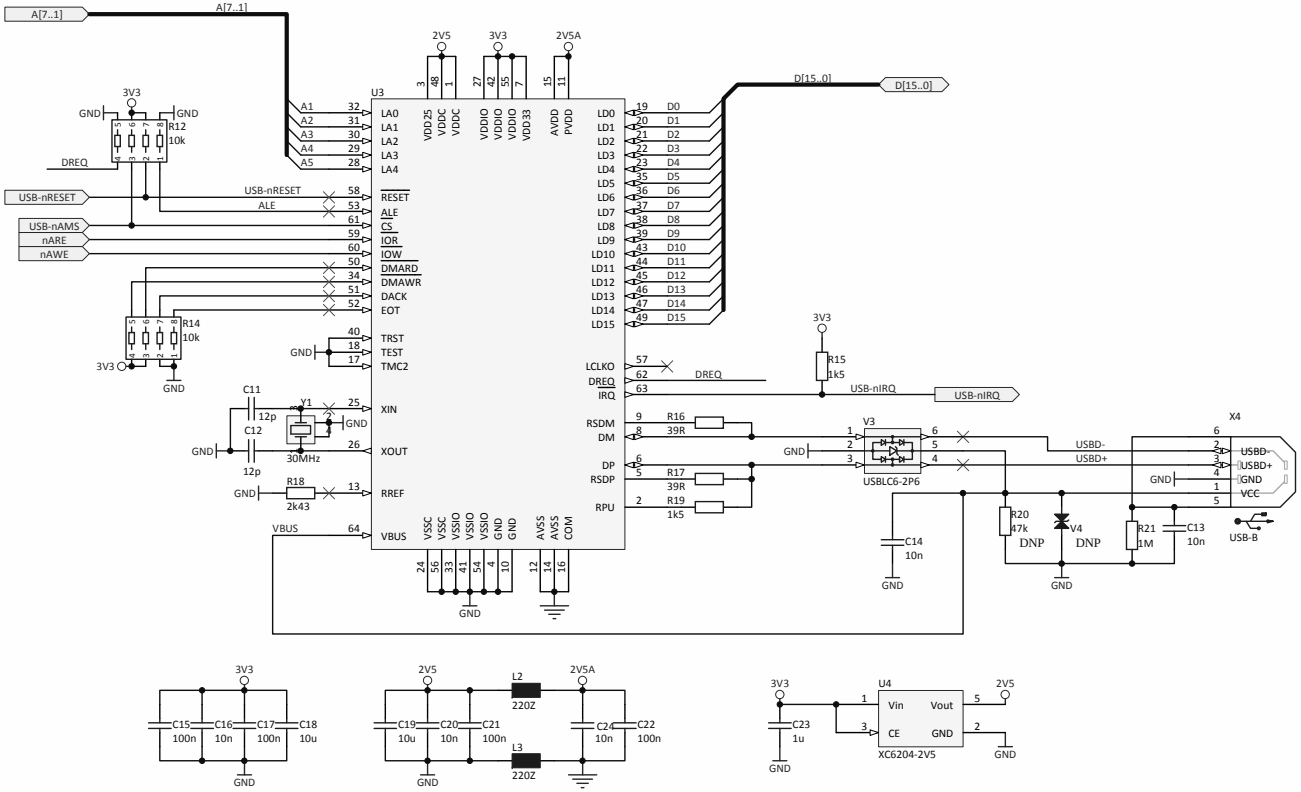

EXT-BF5xx-USB-ETH2	PN: PN2007021	Bluetechnix	Cannot open file S:\qm\Organisation\Logo\logo_blau_vektor [Converted].bmp
USB Controller	Rev: V2.0	Waidhausenstr. 3/19	
	Size: A3	A - 1140 Wien	
	Sheet 2 of 4	AUSTRIA	
Drawn: Daniel Steinmair	Last Update: 26.08.2010		
Checked: Roland Oberhammer	Filename: USB.SchDoc		

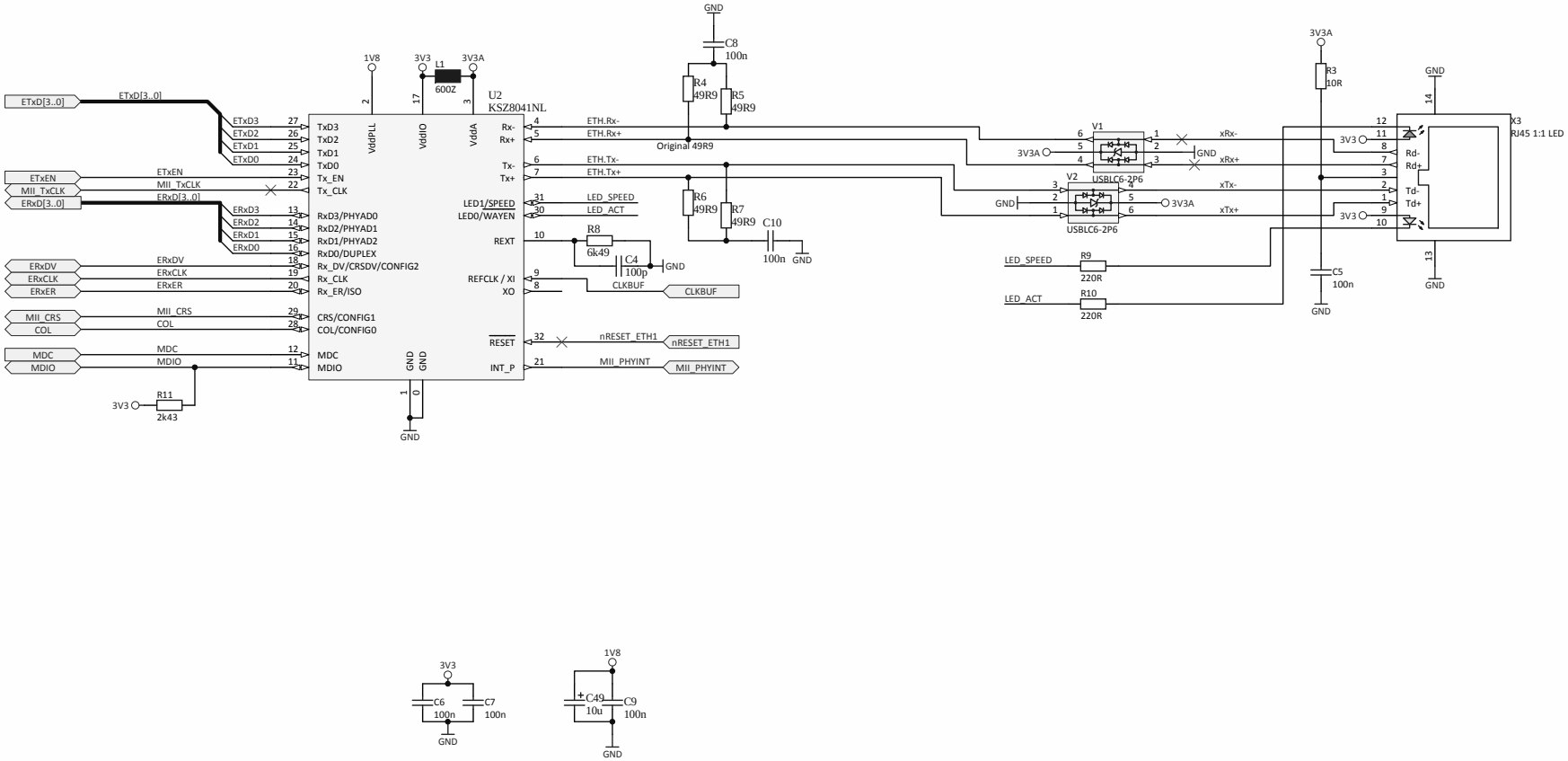

EXT-BF5xx-USB-ETH2	PN: PN2007021	Bluetechnix	Cannot open file S:\qm\Organisation\Logo\logo_blau_vektor [Converted].bmp
Ethernet Physical	Rev: V2.0	Waidhausenstr. 3/19	
	Size: A3	A - 1140 Wien	
	Sheet 3 of 4	AUSTRIA	
Drawn: Daniel Steinmair	Last Update: 26.08.2010		
Checked: Roland Oberhammer	Filename: Ethernet.SchDoc		

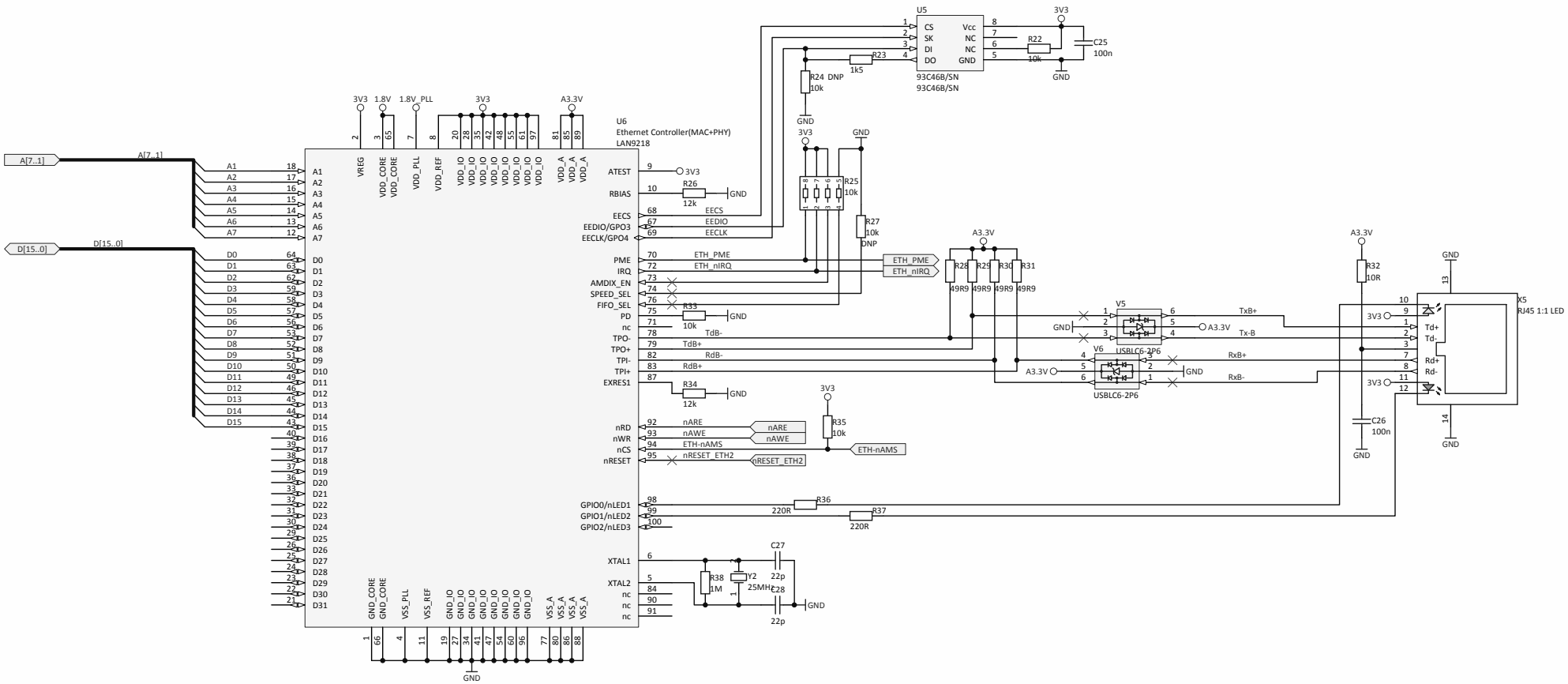

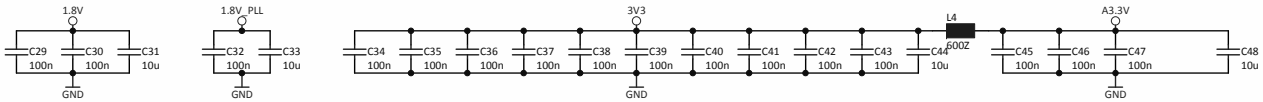

EXT-BF5xx-USB-ETH2	PN: PN2007021	Bluetechnix	Cannot open file
Ethernet Controller	Rev: V2.0	Waidhausenstr. 3/19	S:\qm\Organisation\Logo\log
	Size: A3	A - 1140 Wien	o_blau_vektor
	Sheet 4 of 4	AUSTRIA	[Converted].bmp
Drawn: *	Last Update: 26.08.2010		
Checked: Roland Oberhammer	Filename: SMSC.SchDoc		