EX_ad1836
EX_ad1836.SchDoc; CM-Extender.SchDoc

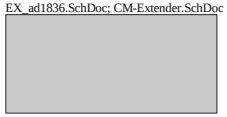

Title **EXT-BF5xx-Audio**		**Top Level**	*Bluetechnix Waidhausenstr. 3/19 A - 1140 Wien AUSTRIA*
Size: A3	Number: 1	Revision: V2.1	
Date: 30.07.2007 Time: 10:23:58		Sheet 1 of 5	
File: TopLevel.SchDoc			Drawn By: Martin Hausner

Title **EXT-BF5xx-Audio**		**Audio CoDec**	Blue Technix Waidhausenstr. 3/19 A - 1140 Wien AUSTRIA
Size: A3	Number: 3	Revision: V2.1	
Date: 30.07.2007 Time: 10:23:58		Sheet 2 of 5	
File: CM-Extender.SchDoc			Drawn By: Martin Hausner

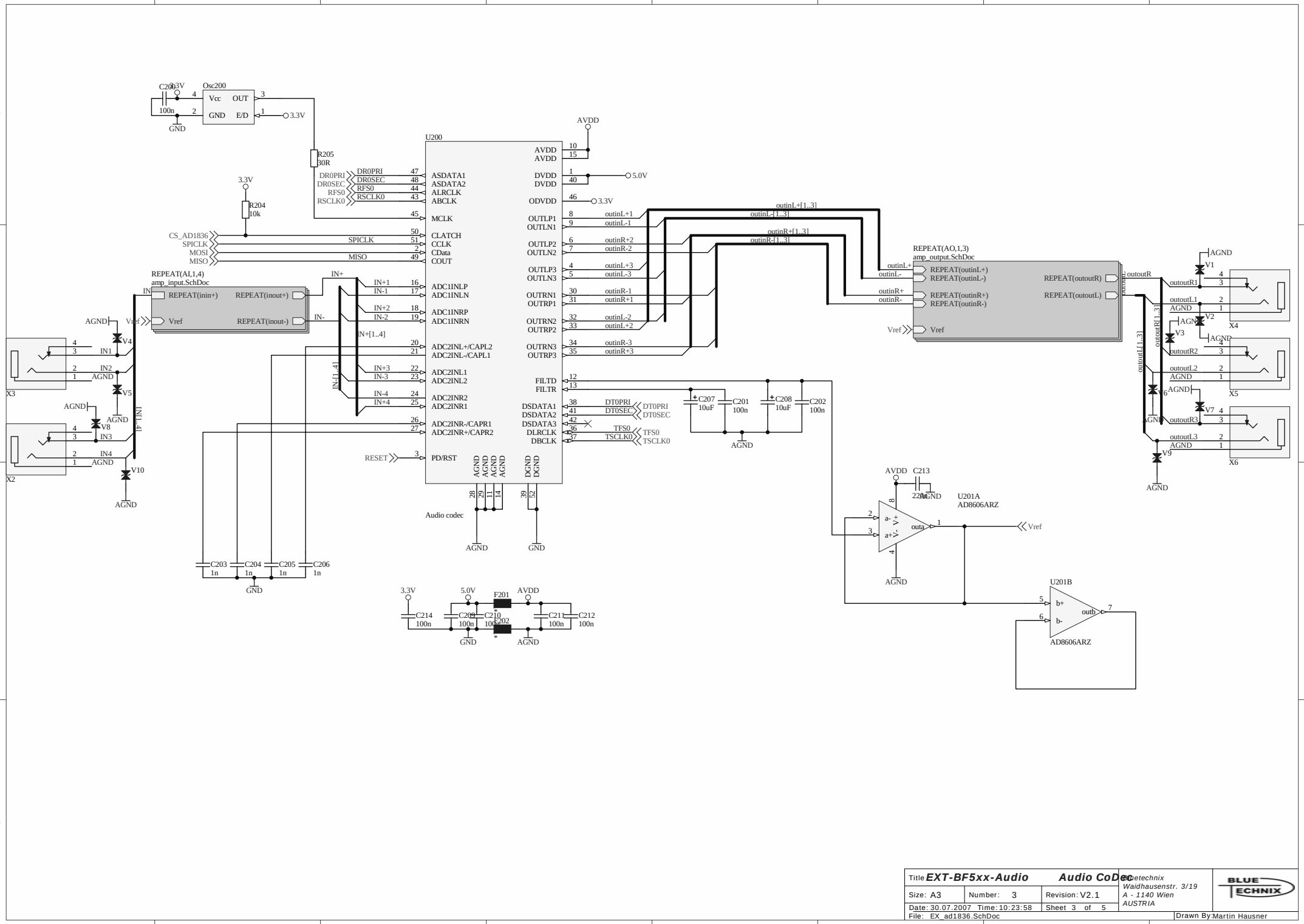

Title EXT-BF5xx-Audio		Audio CoDec	Beetechnix Waidhausenstr. 3/19 A - 1140 Wien AUSTRIA
Size: A3	Number: 3	Revision: V2.1	
Date: 30.07.2007 Time: 10:23:58		Sheet 3 of 5	
File: EX_ad1836.SchDoc			Drawn By: Martin Hausner

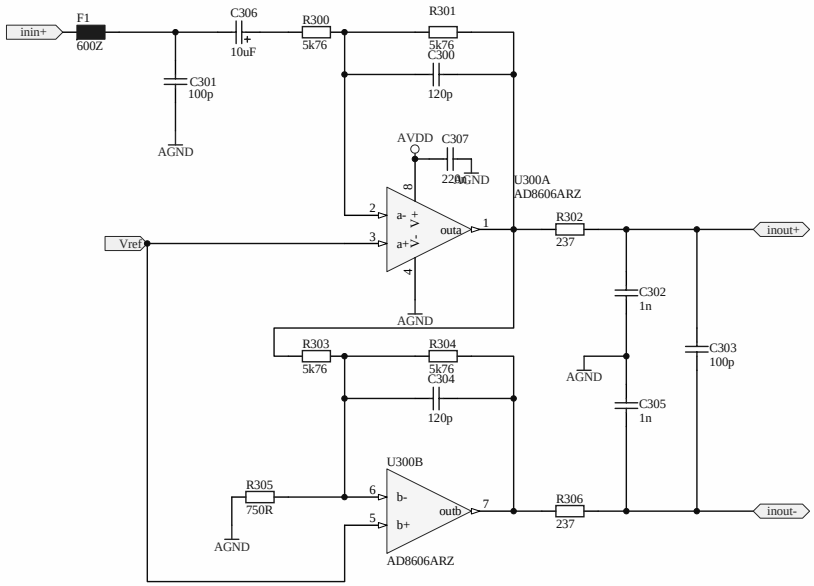

Title **EXT-BF5xx-Audio**		**AMP Input**	*Bluetechnix Waidhausenstr. 3/19 A - 1140 Wien AUSTRIA*
Size: A3	Number: 4	Revision: V2.1	
Date: 30.07.2007 Time: 10:23:59		Sheet 4 of 5	
File: amp_input.SchDoc			Drawn By: Martin Hausner

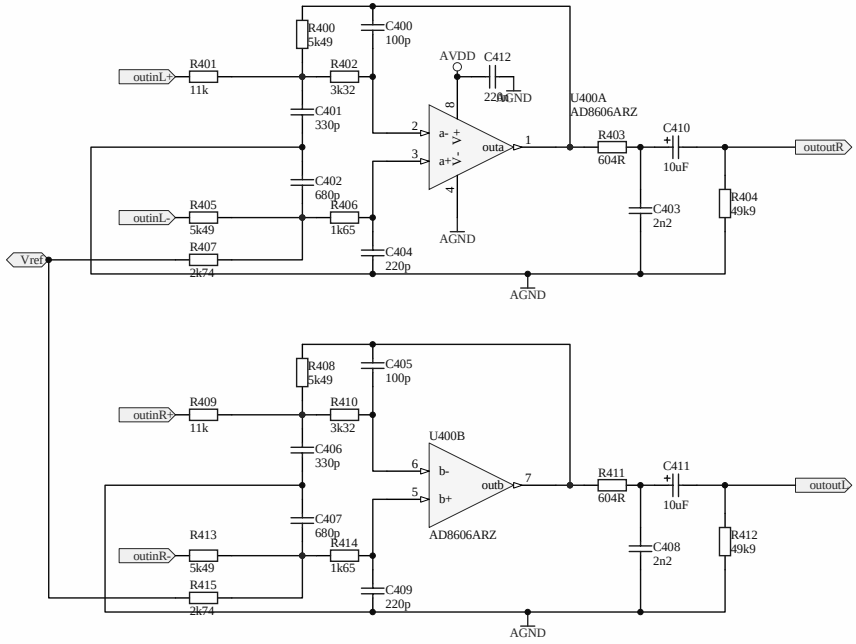

Title **EXT-BF5xx-Audio**		**AMP Output**	*Bluetechnix Waidhausenstr. 3/19 A - 1140 Wien AUSTRIA*
Size: A3	Number: 5	Revision: V2.1	
Date: 30.07.2007 Time: 10:23:59		Sheet 5 of 5	
File: amp_output.SchDoc			Drawn By: Martin Hausner